XR46203

Two-Step LED Current Controller with Line Regulation Compensation

Description

The XR46203 is a two-step LED current controller with line regulation compensation for operating over a wide alternative current (AC) voltage source range. It can drive an external N-channel power MOSFET to regulate the current flowing through a high voltage (HV) LED string.

The XR46203 works as a constant current sink with linear type over voltage protection (OVP), linear type over temperature protection (OTP), and line regulation compensation. It is suitable for applications with a rectified AC voltage source.

The PCB design can be very compact to meet various shape requirements. It is especially suitable for replacing incandescent light bulb and linear type fluorescent lamps.

FEATURES

- Device
  - Two current step control from single device
  - Excellent system power regulation over AC line variation range
  - 6V to 78V chip supply voltage range
  - Over temperature protection
  - Over voltage protection
  - 3mm x 3mm TDFN-8 package
- System
  - Single board LED lighting solution available
  - All solid state components
  - No electrolytic capacitor or MOV required
  - Scalable architecture allows optimization of performance vs. cost
  - Driver-on-board and chip-on-board design solution available which minimize process flow and assembly cost
  - High PF and low THD performance
  - Flexible PCB layout options
  - TRIAC dimmable

APPLICATIONS

- LED Lighting Applications
  - Downlight
  - High bay
  - Specialty
  - Architectural

The product (or products) mentioned in this data sheet are no longer being manufactured and may not be ordered (OBS)

Typical Application

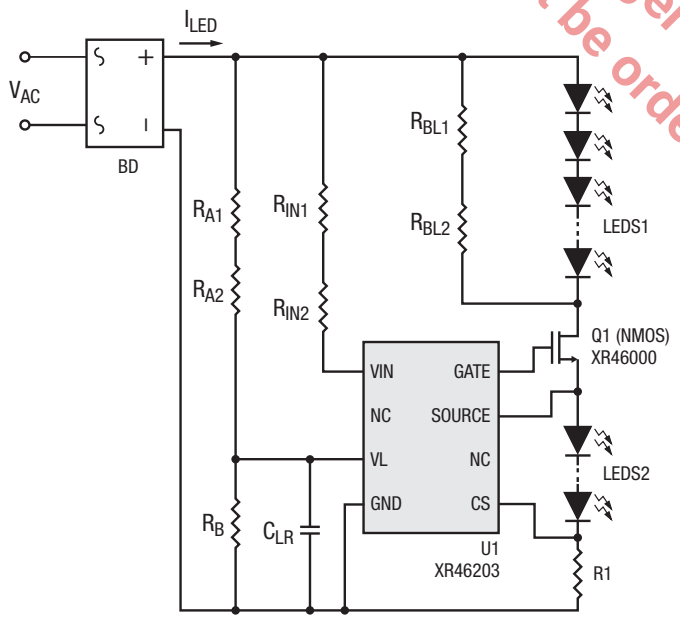

Figure 1. Typical 2-Step Application

Absolute Maximum Ratings

Stresses beyond the limits listed below may cause permanent damage to the device. Exposure to any Absolute Maximum Rating condition for extended periods may affect device reliability and lifetime.

Sustaining Voltage

- VIN, GATE, Source to GND ..... -0.3V to 85V
- GATE to Source ..... -0.3V to 7V
- Source to CS ..... -0.3V to 70V
- VL to GND ..... -0.3V to 7V
- CS to GND ..... -0.3V to 1V

VIN Input Current 3mA

Source to CS Current 180mA

Maximum Operating Junction Temperature, T_J ..... 150°C

Operating Temperature, T_{opr} ..... -40°C to 85°C

Storage Temperature Range ..... -55°C to 150°C

Lead Temperature (Soldering, 10 seconds) ..... 260°C

NOTE:

1. All voltages are with respect to Ground. Currents are positive into, negative out of the specified terminal.
2. All parameters having Min/Max specifications are guaranteed. Typical values are for reference purpose only.
3. Unless otherwise noted, all tests are pulsed tests at the specified temperature, therefore: $T_J = T_C = T_A$.

Operating Conditions

Input Voltage, V_{IN} ..... 6 to 78V

Peak Level Current, I_{PEAK} ..... 20 to 180mA

The product (or products) mentioned in this data sheet are no longer being manufactured and may not be ordered (OBS)

Electrical Characteristics

Unless otherwise noted, typical values are at T_A = 25°C.

Symbol	Parameter	Conditions	Min	Typ	Max	Units
VIN_{MIN}	Minimum VIN supply voltage		6			V
I_{IN}	VIN supply current	VIN = 6V to 73V		0.3		mA
VIN_{Clamp}	VIN over voltage clamp	When VIN > VIN_{Clamp}, I_{IN} will increase to > 1mA to clamp VIN at VIN_{Clamp}	74	76	80	V
V_{CS}	CS voltage	V_{VL} = 1.75V	244	250	256	mV
ΔV_{LR1}	CS voltage line regulation vs. V_{VL} (1)	V_{VL} = 1.57V to 1.75V		-0.28		mV/mV
ΔV_{LR2}		V_{VL} = 1.75V to 2.10V		-0.24		
ΔV_{LR3}		V_{VL} = 2.10V to 2.28V		-0.3		
V_{REF1}/V_{REF0}	Reference voltage ratio		86	90	94	%
$V_{CS,Clamp}$	Maximum V_{CS} clamp	VL under voltage protection, V_{VL} < 1.45V	310	323	336	mV
V_{Gate}	Gate voltage	Gate to Source		5.4		V
I_{SOURCE}	GATE source current(2)	V_{Gate} - V_{Source} = 3V		30		µA
I_{SINK}	GATE sink current(2)	V_{Gate} - V_{Source} = 3V		500		
T_{TP}	Thermal protection trip temperature(2)	When T_J is higher than T_{TP}, V_{CS} decreases linearly	135	145		°C
$\Delta V_{CS}/\Delta T_J$	Thermal protection mode V_{CS} decreasing slope(2)	$T_J > T_{TP}$		-1.1		%/°C

NOTES:

1. The CS voltage line regulation is defined as:

$$\Delta V_{LR1} = \frac{\Delta V_{CS}}{\Delta V_{VL}} = \frac{V_{CS(V_{VL}=1.75V)} - V_{CS(V_{VL}=1.57V)}}{1.75V–1.57V}$$

$$\Delta V_{LR2} = \frac{\Delta V_{CS}}{\Delta V_{VL}} = \frac{V_{CS(V_{VL}=2.10V)} - V_{CS(V_{VL}=1.75V)}}{2.10V–1.75V}$$

$$\Delta V_{LR3} = \frac{\Delta V_{CS}}{\Delta V_{VL}} = \frac{V_{CS(V_{VL}=2.28V)} - V_{CS(V_{VL}=2.10V)}}{2.28V–2.10V}$$

2. Guarantee by design, not by production test.

The product (or products) mentioned in this data sheet are no longer being manufactured and may not be ordered (OBS)

Pin Configuration

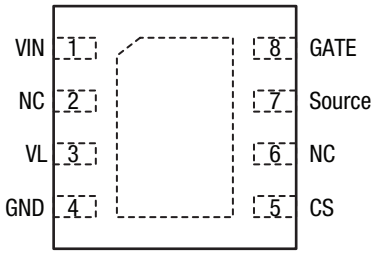

3mm x 3mm TDFN-8, Top View

Pin Functions

Pin Number	Pin Name	Description
1	VIN	Power supply pin.
2	NC	No connection.
3	VL	Line regulation sense pin. The reference voltage is adjusted according to VL to provide the line regulation compensation and to provide over voltage protection.
4	GND	Ground pin.
5	CS	Current sense pin. Connect a sense resistor, R_{CS}, between this pin and the GND pin. The peak current is set by: $I_{OUT} = \frac{V_{CS}}{R_{CS}}$
6	NC	No connection.
7	Source	External HV NMOS source pin. The V_F of the LED segment connected between the source pin and the CS pin should not be higher than 70V.
8	GATE	External HV NMOS gate driving pin. Limited to 5.5V maximum.
Exposed Thermal Pad (EP)		Exposed thermal pad of the chip. Use this pad to enhance the power dissipation capability. The thermal conductivity will be improved if a copper foil on PCB is soldered with the thermal pad. It is recommended to connect the exposed thermal pad to the GND pin.

The product (or products) mentioned in this data sheet are no longer being manufactured and may not be ordered (EOS)

Functional Block Diagram

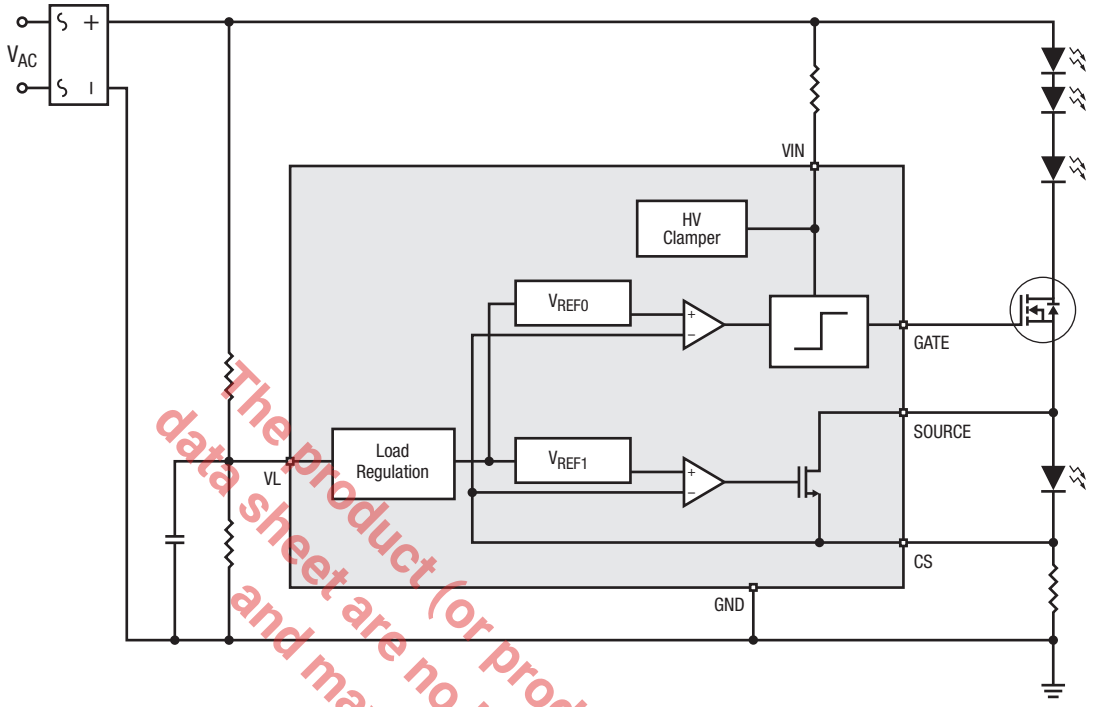

Figure 2. Functional Block Diagram

The product (or products) mentioned in this data sheet are no longer being manufactured and may not be ordered (OBS)

Applications Information

Typical Application

For a typical 2-step driving scheme using a single XR46203, the electrical performance is good enough to meet applications where the Power Factor (PF) is higher than 0.92 and the Total Harmonic Distortion (THD) is around 30%. If higher PF or lower THD is required, one more XR46083 or XR46084 can be added to the circuit to make a 3-step driving scheme, as shown in below. The 3-step system can provide better electrical performance with PF greater than 0.96 and THD approximately 20%. Line regulation, THD and PF performance are illustrated in Figures 5 and 6.

For a discussion regarding the basic circuit operation of MaxLinear's AC step drivers, see XR46083 Application Note.

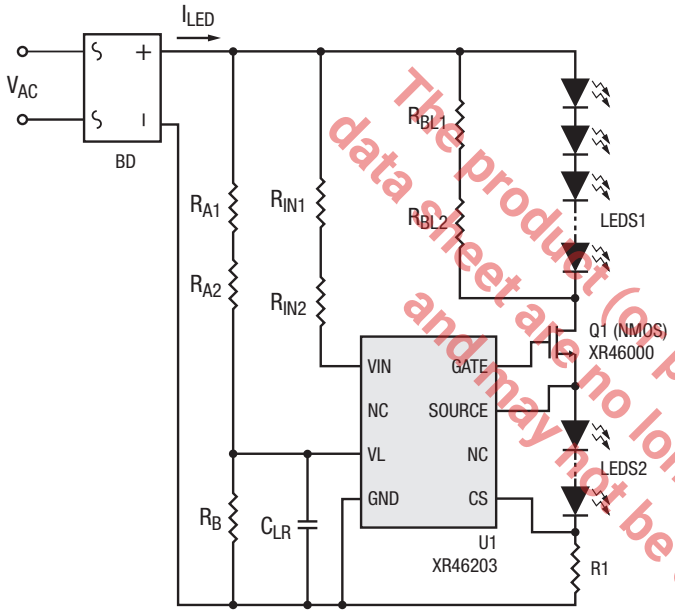

Figure 3. 2-Step (PF > 0.92, THD = ~30%)

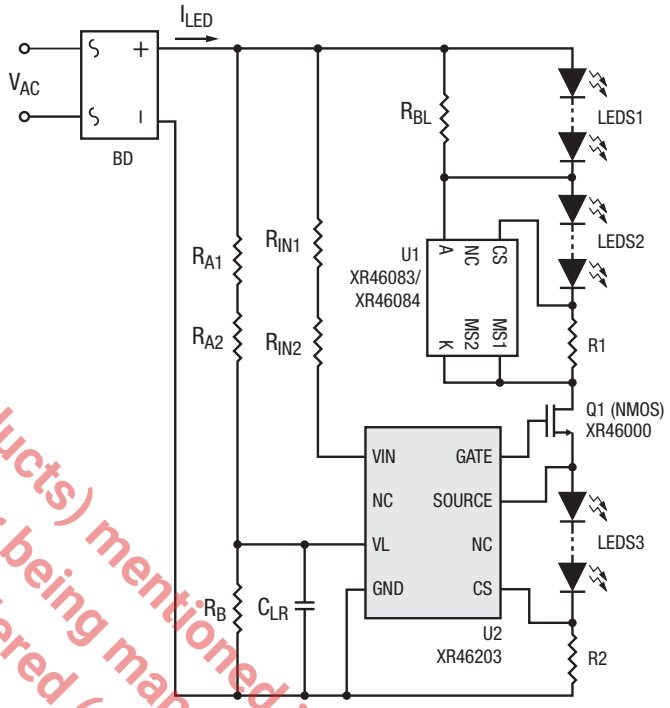

Figure 4. 3-Step (PF > 0.96, THD = ~20%)

The product (s) products) mentioned in this data sheet are no longer being manufactured and may not be ordered (OBS)

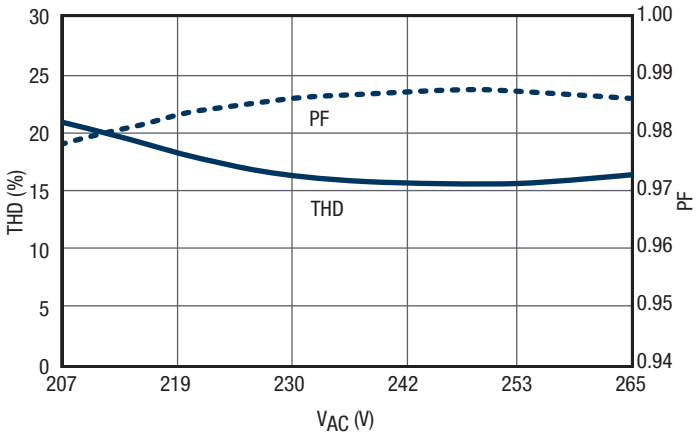

Figure 5. THD and PF vs. V_{AC} for 3-Step Solution

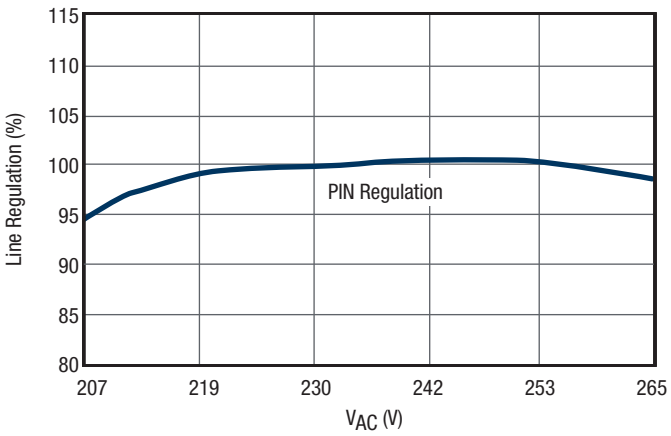

Figure 6. Line Regulation vs. V_{AC} for 3-Step Solution

Applications Information (Continued)

Linear Type Thermal Protection

When the junction temperature T_J rises to the Thermal Protection Trip Temperature T_{TP} (typically 145°C), the current sense voltage V_{CS} starts to decrease linearly at a slope of -1.1%/°C. The LED driving current decreases proportionally with the V_{CS} voltage. The system will function normally during the thermal protection mode with the lower driving current, but the power dissipation of the XR46203 chip will decrease until thermal equilibrium is reached.

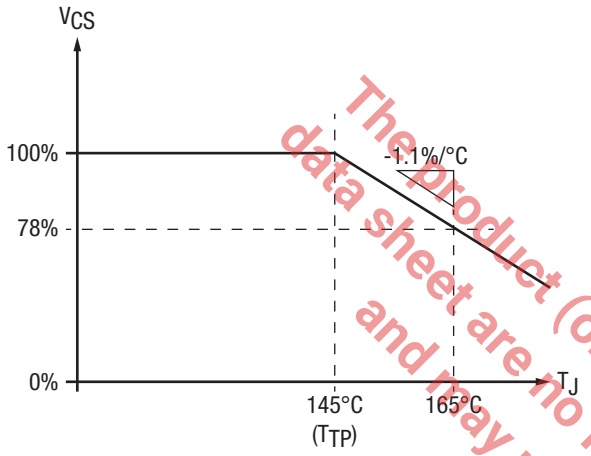

Figure 7. V_{CS} vs. T_J

Line Regulation Compensation

When there is variation in line voltage (V_{AC}), the power of the lamp will also change if the LED driving current is kept unchanged. In order to provide good line regulation when V_{AC} varies within a ±20% range, the average of the rectified V_{AC} is sensed by the V_L pin to provide compensation in order to attempt to keep the power of the lamp at the same level.

The LED driving current is adjusted as the voltage level V_{VL} at the V_L pin is changed. Based on the design, the LED driving current will be lower when V_{AC} is higher than the nominal value, and the LED driving current will be higher when V_{AC} is lower than the nominal value. The system power can then be maintained at approximately the same level. During power on, the driving current may be slightly higher for a few cycles until steady state is reached.

With the compensation function, the XR46203 provides excellent power line regulation over a ±20% V_{AC} variation range, as shown in Figures 8 and 9.

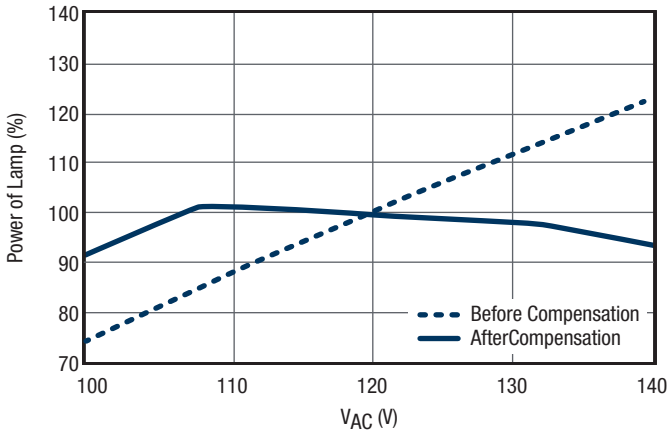

Figure 8. $120V_{AC}$ Power Line Regulation ($120V_{AC}$ ±15%)

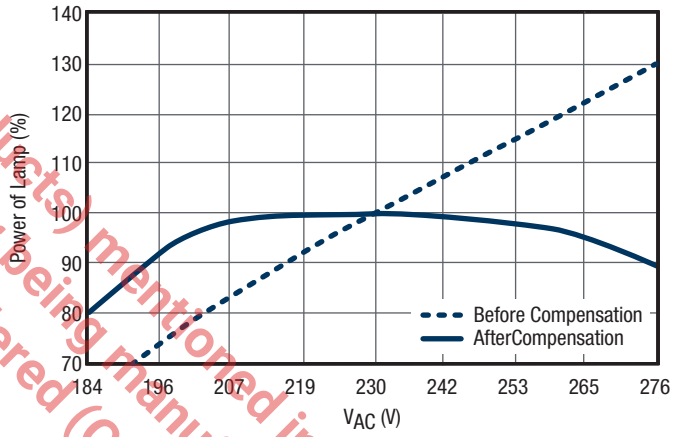

Figure 9. $230V_{AC}$ Power Line Regulation ($230V_{AC}$ ±20%)

The product (or products) mentioned in this data sheet are no longer being manufactured and may not be ordered (OBS)

Applications Information (Continued)

Layout Suggestion

The exposed thermal pad under the chip is used to enhance the power dissipation capability of the DFN package. The thermal conductivity will be improved if a copper foil on the PCB that is soldered to the thermal pad can be as large as possible. It is strongly recommended to connect the GND pin to the exposed thermal pad.

The external HV NMOS is also recommended to be placed close to the XR46203. In addition, the current sense resistor connected between the CS pin and GND pin should be placed as close as possible to the CS pin and GND pin, as the example in below.

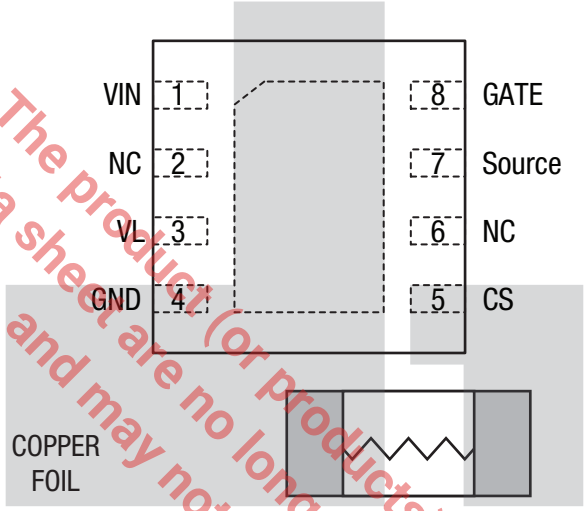

Figure 10. Recommended Layout

The product (or products) mentioned in this data sheet are no longer being manufactured and may not be ordered (OBS)

Mechanical Dimensions

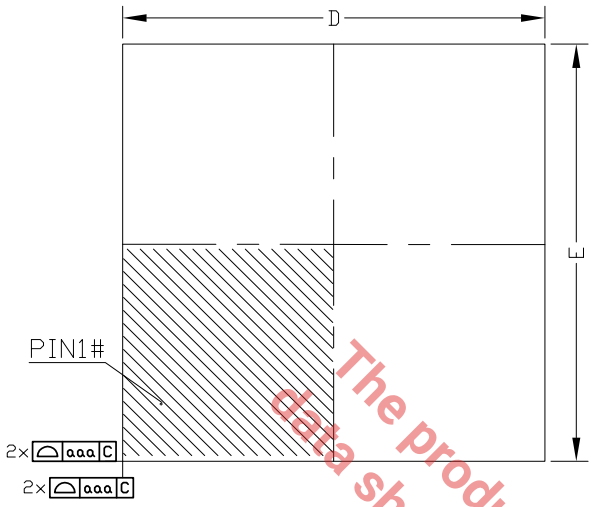

TOP VIEW

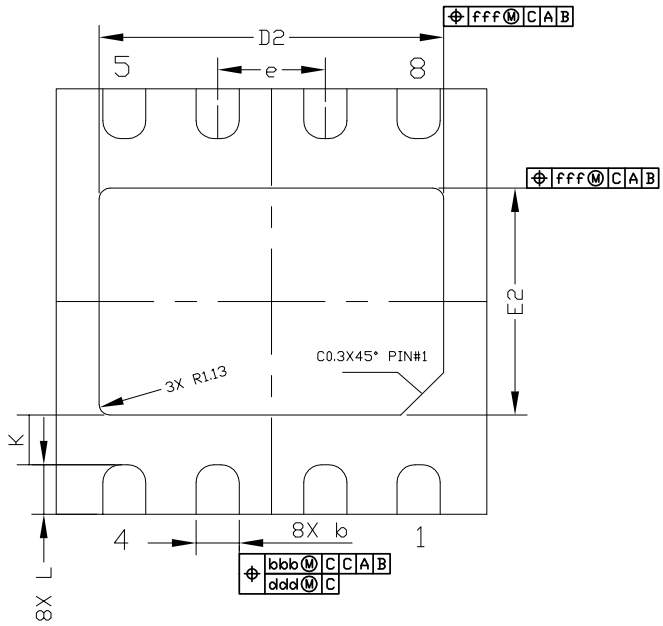

BOTTOM VIEW

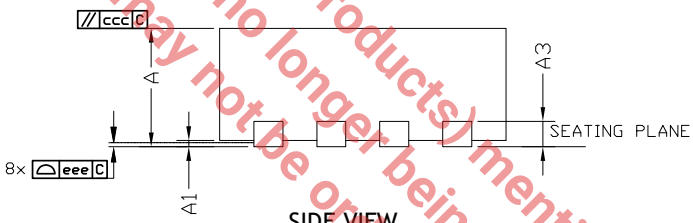

SIDE VIEW

DIM / SYMBOL	MIN.	NOM.	MAX.
A	0.70	0.75	0.80
A1	0	0.02	0.05
A3	–	0.20 REF	–
b	0.18	0.25	0.30
D		3.00BSC	
E		3.00BSC	
D2	2.20	2.40	2.60
E2	1.40	1.60	1.80
e		0.65BSC	
L	0.25	0.40	0.55
K	0.20		
aaa		0.15	
bbb		0.10	
ccc		0.10	
ddd		0.05	
eee		0.08	
fff		0.10	

TERMINAL DETAILS

NOTE : ALL DIMENSIONS ARE IN MILLIMETERS, ANGLES ARE IN DEGREES.

Drawing No.: POD-00000088

Revision: D

The product (or products) mentioned in this data sheet are no longer being manufactured and may not be ordered (OBS)

Recommended Land Pattern and Stencil

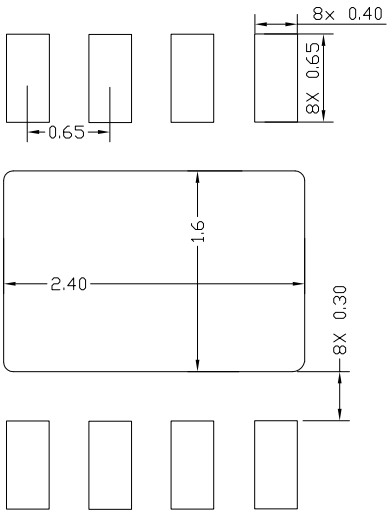

TYPICAL RECOMMENDED LAND PATTERN

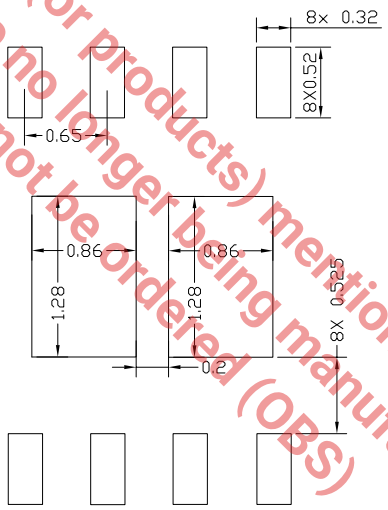

TYPICAL RECOMMENDED STENCIL

NOTE : ALL DIMENSIONS ARE IN MILLIMETERS, ANGLES ARE IN DEGREES.

Drawing No.: POD-00000088

Revision: D

The product (or products) mentioned in this data sheet are no longer being manufactured and may not be ordered (OBS)

Ordering Information[1]

Part Number	Operating Temperature Range	Lead-Free	Package	Packaging Method
XR46203IHBTR	-40°C to 85°C	Yes[2]	TDFN8 3x3	Tape and Reel

NOTE:
1. Refer to www.exar.com/XR46203 for most up-to-date Ordering Information.
2. Visit www.exar.com for additional information on Environmental Rating.

Revision History

Revision	Date	Description
1.0	June 2015	Initial Release.
1A	Oct 2016	New datasheet format, update Typical Application and update Package Description.
1B	Aug 2018	Update to MaxLinear logo. Update format.

The product (or products) mentioned in this data sheet are no longer being manufactured and may not be ordered (OBS)

Corporate Headquarters:
5966 La Place Court
Suite 100
Carlsbad, CA 92008
Tel.:+1 (760) 692-0711
Fax: +1 (760) 444-8598
www.maxlinear.com

High Performance Analog:
1060 Rincon Circle
San Jose, CA 95131
Tel.: +1 (669) 265-6100
Fax: +1 (669) 265-6101
www.exar.com

The content of this document is furnished for informational use only, is subject to change without notice, and should not be construed as a commitment by MaxLinear, Inc.. MaxLinear, Inc. assumes no responsibility or liability for any errors or inaccuracies that may appear in the informational content contained in this guide. Complying with all applicable copyright laws is the responsibility of the user. Without limiting the rights under copyright, no part of this document may be reproduced into, stored in, or introduced into a retrieval system, or transmitted in any form or by any means (electronic, mechanical, photocopying, recording, or otherwise), or for any purpose, without the express written permission of MaxLinear, Inc.

Maxlinear, Inc. does not recommend the use of any of its products in life support applications where the failure or malfunction of the product can reasonably be expected to cause failure of the life support system or to significantly affect its safety or effectiveness. Products are not authorized for use in such applications unless MaxLinear, Inc. receives, in writing, assurances to its satisfaction that: (a) the risk of injury or damage has been minimized; (b) the user assumes all such risks; (c) potential liability of MaxLinear, Inc. is adequately protected under the circumstances.

MaxLinear, Inc. may have patents, patent applications, trademarks, copyrights, or other intellectual property rights covering subject matter in this document. Except as expressly provided in any written license agreement from MaxLinear, Inc., the furnishing of this document does not give you any license to these patents, trademarks, copyrights, or other intellectual property.

Company and product names may be registered trademarks or trademarks of the respective owners with which they are associated.

© 2016 - 2018 MaxLinear, Inc. All rights reserved